HOF
HYDRAULIC SOLUTIONS

Hydraulic Single Vane Pumps
HV & HVQ Series

Catalog 2021

www.hofhydraulic.com

HOF HYDRAULIC SOLUTIONS

High Performance Single Vane Pump 20 HV/HVQ Series

Specifications :

20 HV Series

Model	Delivery at 1200 r/min & 7 bar (100 psi) USgpm	Displacement cm³/r (in³/r)	Maximum Speed rpm	Maximum Pressure bar (psi)	Typical Delivery at max speed & pressure L/min (USgpm)	Typical Input Power at max speed & pressure kW (hp)	Weight kg (lb)
20HV	2	7.0 (0.42)	1800	206 (3000)	11.3 (3.0)	5.2 (7.0)	12.5 (27.5)
	5	18 (1.10)			28.4 (7.5)	11.2 (15.0)	
	8	27 (1.67)			45.4 (12.0)	17.0 (22.8)	
	9	30.2 (1.84)			51.0 (13.5)	18.7 (25.1)	
	11	36 (2.22)			56.8 (15.0)	22.6 (30.3)	
	12	40 (2.47)		158 (2300)	60.9 (16.1)	19.3 (25.83)	
	14	45 (2.78)		138 (2000)	71.3 (18.85)	18.9 (25.28)	

20 HVQ Series

Model	Delivery at 1200 r/min & 7 bar (100 psi) USgpm	Displacement cm³/r (in³/r)	Maximum Speed rpm	Maximum Pressure bar (psi)	Typical Delivery at max speed & pressure L/min (USgpm)	Typical Input Power at max speed & pressure kW (hp)	Weight kg (lb)
20HVQ	2	7.0 (0.42)	2700	206 (3000)	15.9 (4.2)	7.3 (9.8)	12.5 (27.5)
	5	18 (1.10)			41.6 (11.0)	17.9 (24.0)	
	8	27 (1.67)			64.3 (17.0)	26.1 (35.0)	
	9	30.2 (1.84)			71.5 (18.9)	32.9 (44.1)	
	11	36 (2.22)			87.1 (23.0)	35.4 (47.5)	
	12	39 (2.41)		158 (2300)	96.5 (25.5)	28.3 (38.0)	
	14	45 (2.80)		138 (2300)	113.6 (30.9)	29.1 (39.0)	

High Performance Single Vane Pump 20 HV/HVQ Series

Ordering Code : Single Pump

20	HVQ	-	11	A	S	-	1	C	20	L
1	2		3	4	5		6	7	8	9

1. Model :
   - 20 - Standard Bearing
   - 21 - Heavy Duty Bearing
     SAE B 2 bolts mounting flange J744

2. Series
   - HV - Industrial
   - HVQ - Mobile

3. Displacement
   Volumetric displacement cm³/rev (in³/rev)
   - 02 - 7.0 (0.43)
   - 05 - 18.0 (1.10)
   - 08 - 27.3 (1.67)
   - 09 - 30.3 (1.85)
   - 11 - 36.3 (2.22)
   - 12 - 40.4 (2.47)
   - 14 - 45.5 (2.78)

4. Port Connection (4 bolts SAE flange J518C)
   - A - UNC Port Connection
   - AM - Metric Port Connection

5. Mounting & Shaft seal assembly
   - Omit - Single Shaft Seal
   - S - Double Shaft Seal

6. Type of shaft
   - 1 - Straight Keyed Shaft
   - 151 - Splined Shaft

7. Outlet Port Position (Viewed from cover end)
   - A - Opposite inlet
   - B - 90° CCW from inlet
   - C - Inline with inlet
   - D - 90° CW from inlet

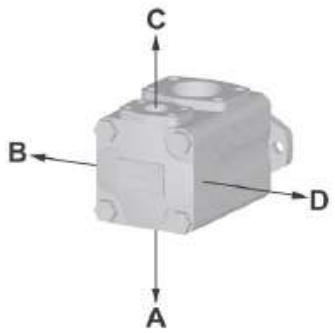

8. Design
   Subject to change. Installation dimension remain the same for designs - 20 through -29

9. Shaft Rotation (viewed from shaft end)
   - R - Turn right
   - L - Turn left

High Performance Single Vane Pump 20 HV/HVQ Series

Installation Dimension mm (inch)

Single Pump 20HV/HVQ

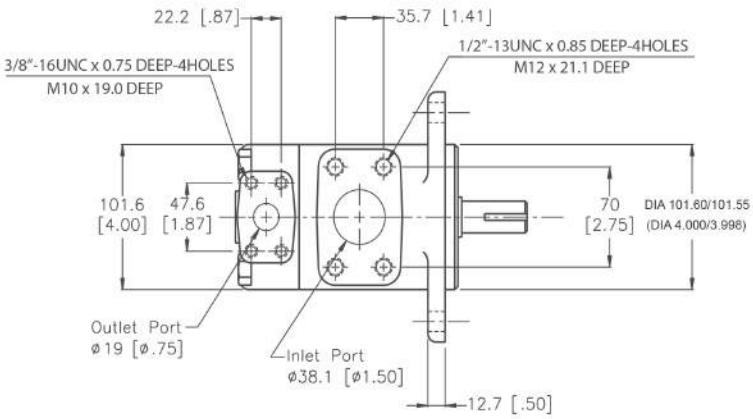

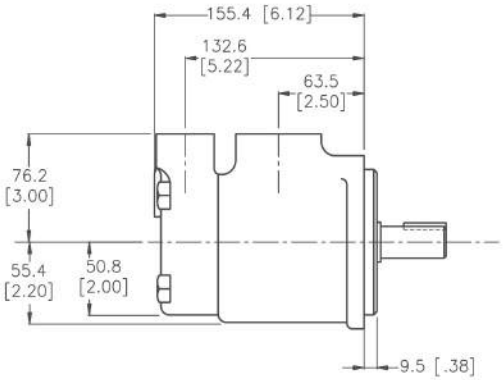

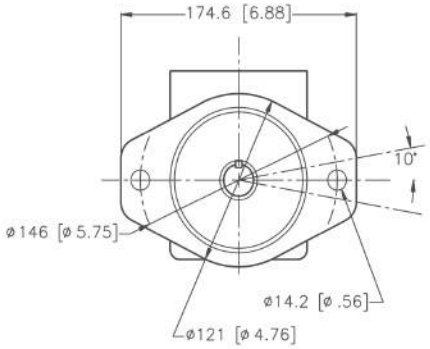

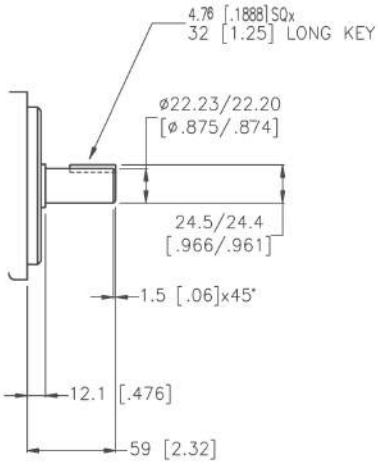

Shaft 1
Keyed Shaft

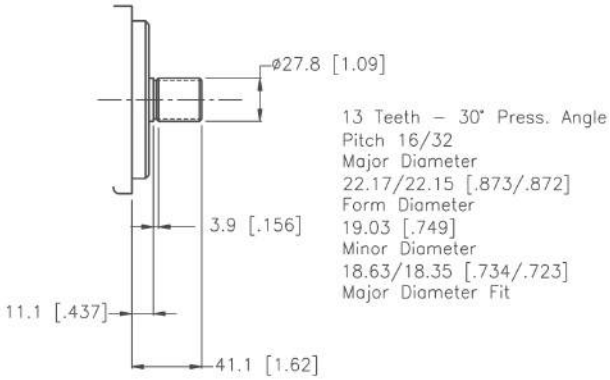

Shaft 151
Splined Shaft

High Performance Single Vane Pump 20 HV/HVQ Series

Performance Characteristics

20HV, Cover End of 20HV

Based on SAE 10W Fluid at 50°C (120°F) and pump inlet at 0 PSIG (14.7 PSIA)

At 1200 rpm

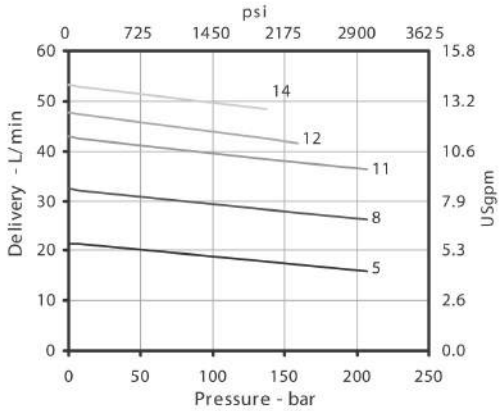

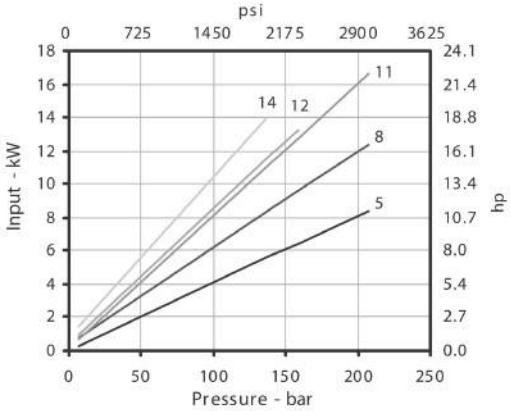

At 1500 rpm

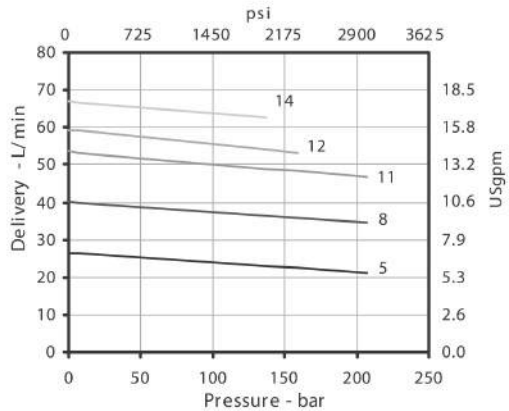

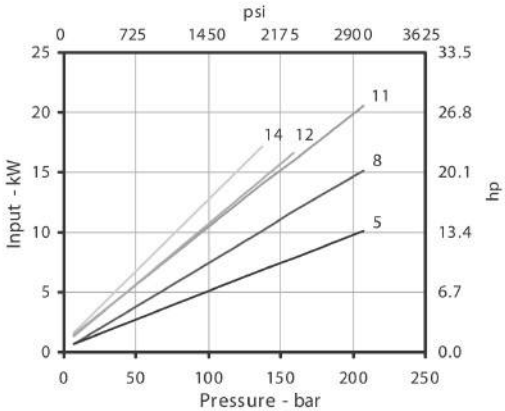

At 1800 rpm

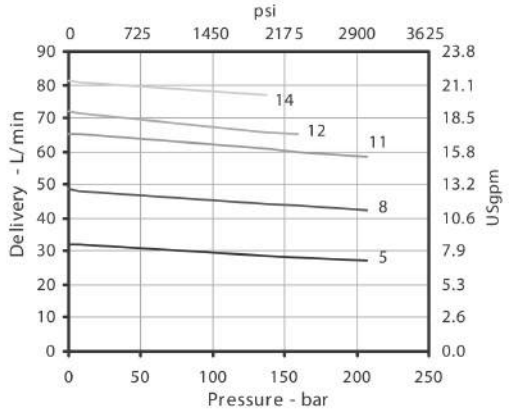

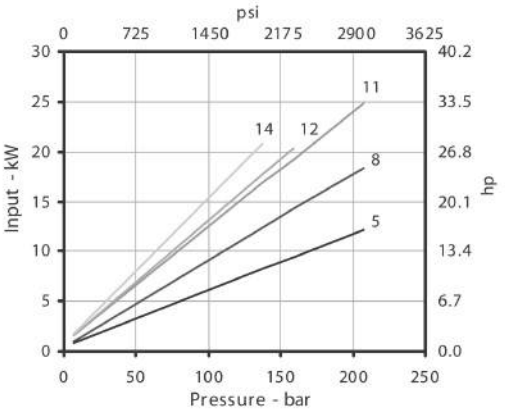

High Performance Single Vane Pump 20 HV/HVQ Series

20HVQ, Cover End of 20HVQ

Based on SAE 10W Fluid at 82°C (180°F) and pump inlet at 0 PSIG (14.7 PSIA)

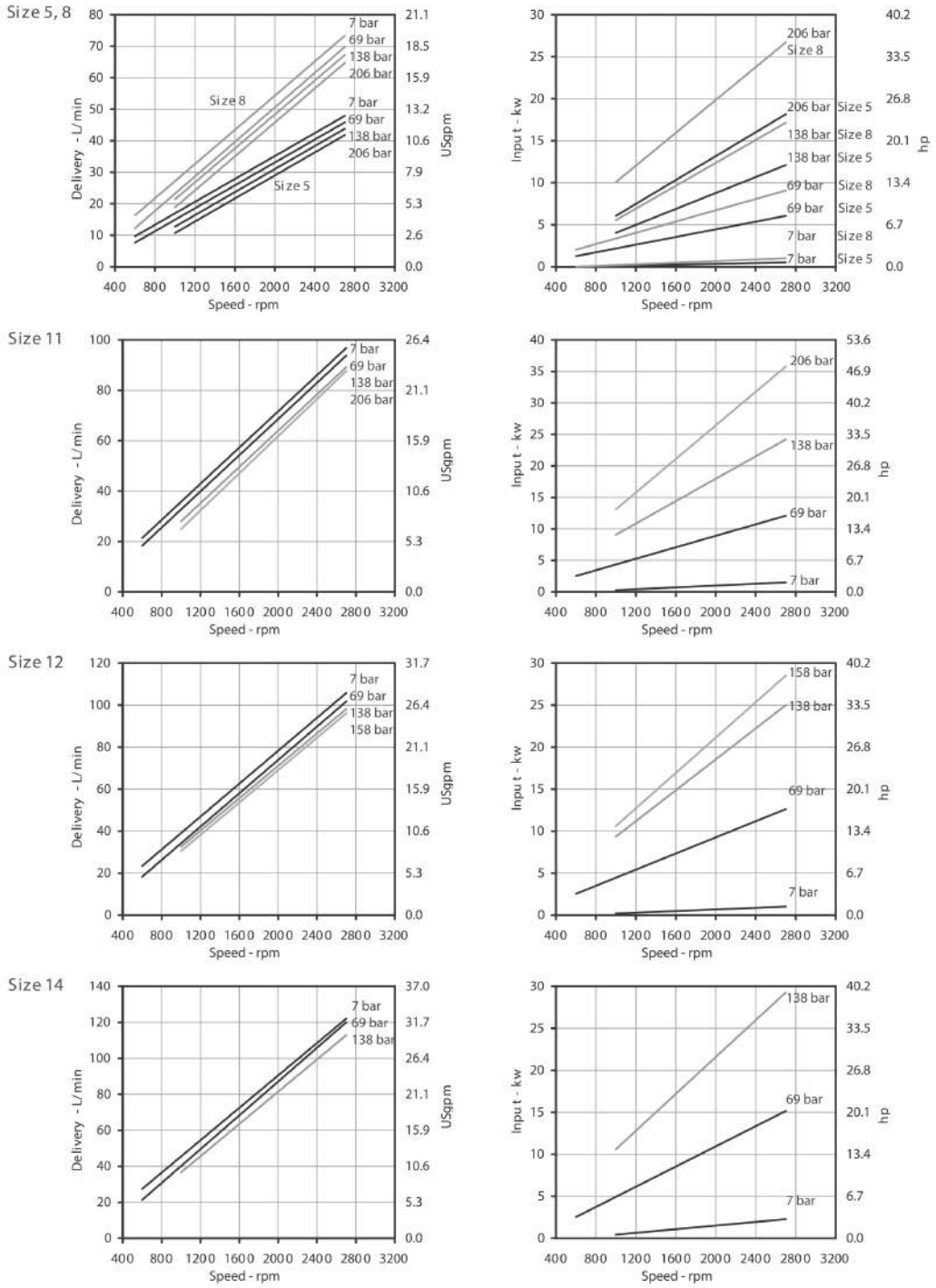

For the Cover End Cartridge, the speed could not exceed the maximum speed of the shaft End Cartridge

HOF HYDRAULIC SOLUTIONS

High Performance Single Vane Pump 25 HV/HVQ Series

Specifications :

25 HV Series

Model	Delivery at 1200 r/min & 7 bar (100 psi) USgpm	Displacement cm³/r (in³/r)	Maximum Speed rpm	Maximum Pressure bar (psi)	Typical Delivery at max speed & pressure L/min (USgpm)	Typical Input Power at max speed & pressure kW (hp)	Weight kg (lb)
25HV	12	39 (2.47)	1800	172 (2500)	62.1 (16.4)	22.9 (30.8)	14.8 (32.5)
	14	45 (2.78)			69.6 (18.4)	25.7 (34.5)	
	17	55 (3.39)			86.3 (22.8)	29.8 (40.0)	
	19	60.8 (3.72)			96.1 (25.4)	32.5 (43.5)	
	21	67 (4.13)			106.0 (28.0)	34.0 (45.6)	

25 HVQ Series

Model	Delivery at 1200 r/min & 7 bar (100 psi) USgpm	Displacement cm³/r (in³/r)	Maximum Speed rpm	Maximum Pressure bar (psi)	Typical Delivery at max speed & pressure L/min (USgpm)	Typical Input Power at max speed & pressure kW (hp)	Weight kg (lb)
25HVQ 26HVQ	12	40 (2.45)	2700	206 (3000)	87.1 (23.0)	41.0 (55.0)	14.8 (32.5)
	14	45 (2.77)			102.2 (27.0)	46.6 (62.5)	
	17	55 (3.37)	2500		117.3 (31.0)	51.8 (69.5)	
	19	60.8 (3.72)			133.5 (34.5)	53.0 (71.0)	
	21	67 (4.12)			143.8 (38.0)	61.9 (83.0)	

High Performance Single Vane Pump
25 HV/HVQ Series

Ordering Code : Single Pump

25	HVQ	-	17	A	S	-	1	C	20	L
1	2		3	4	5		6	7	8	9

1. Model :
   - 25 - Standard Bearing
   - 26 - Heavy Duty Bearing
     SAE B 2 bolts mounting flange J744

2. Series
   - HV - Industrial (Except 26)
   - HVQ - Mobile

3. Displacement
   Volumetric displacement cm³/rev (in³/rev)
   - 12 - 39.0 (2.47)
   - 14 - 45.0 (2.78)
   - 17 - 55.3 (3.39)
   - 19 - 60.8 (3.72)
   - 21 - 67.0 (4.13)

4. Port Connection (4 bolts SAE flange J518C)
   - A - UNC Port Connection
   - AM - Metric Port Connection

5. Mounting & Shaft seal assembly
   - Omit - Single Shaft Seal
   - S - Double Shaft Seal

6. Type of shaft
   - 1 - Straight Keyed Shaft
   - 11 - Splined Shaft
   - 86 - Heavy Duty Straight Keyed Shaft

7. Outlet Port Position (Viewed from cover end)
   - A - Opposite inlet
   - B - 90° CCW from inlet
   - C - Inline with inlet
   - D - 90° CW from inlet

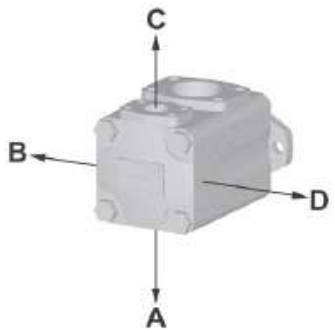

8. Design
   Subject to change. Installation dimension remain the same for designs - 20 through -29

9. Shaft Rotation (viewed from shaft end)
   - R - Turn right
   - L - Turn left

High Performance Single Vane Pump 25 HV/HVQ Series

Installation Dimension mm (inch)

Single Pump 25HV/HVQ

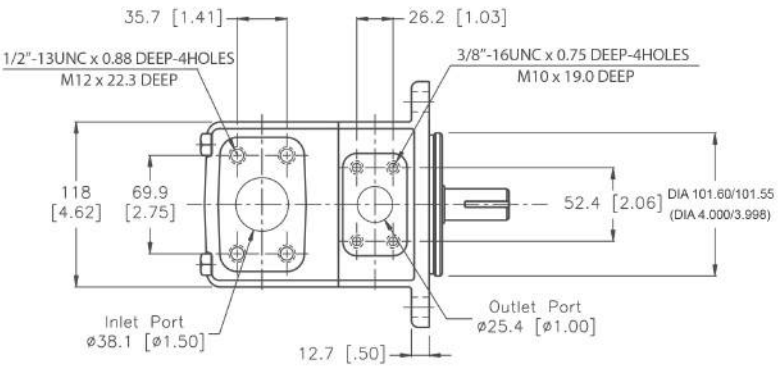

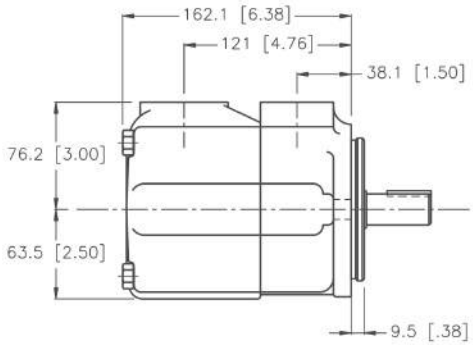

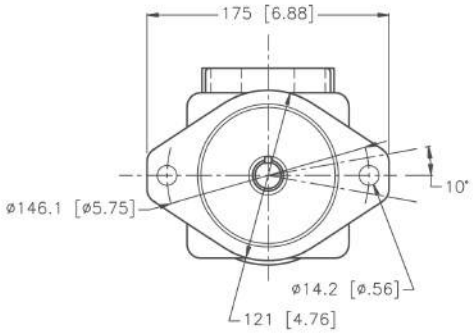

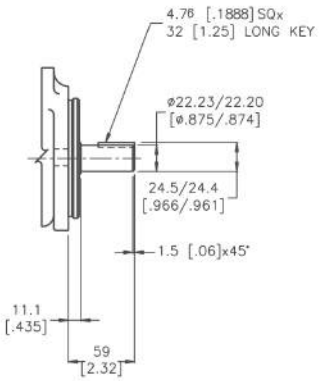

Shaft 1
Keyed Shaft

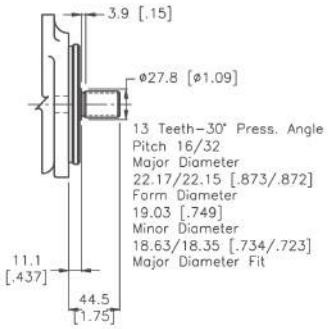

Shaft 11
Splined Shaft

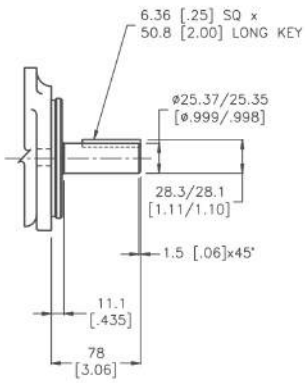

Shaft 86
Heavy Duty Keyed Shaft

High Performance Single Vane Pump 25 HV/HVQ Series

Performance Characteristics

25HV, Shaft End of 25HV, Cover End of 25HV

Based on SAE 10W Fluid at 50°C (120°F) and pump inlet at 0 PSIG (14.7 PSIA)

At 1200 rpm

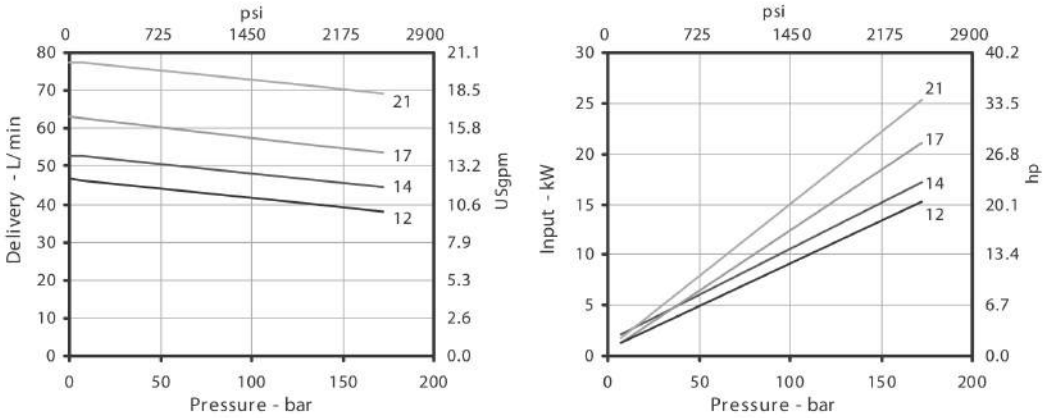

At 1500 rpm

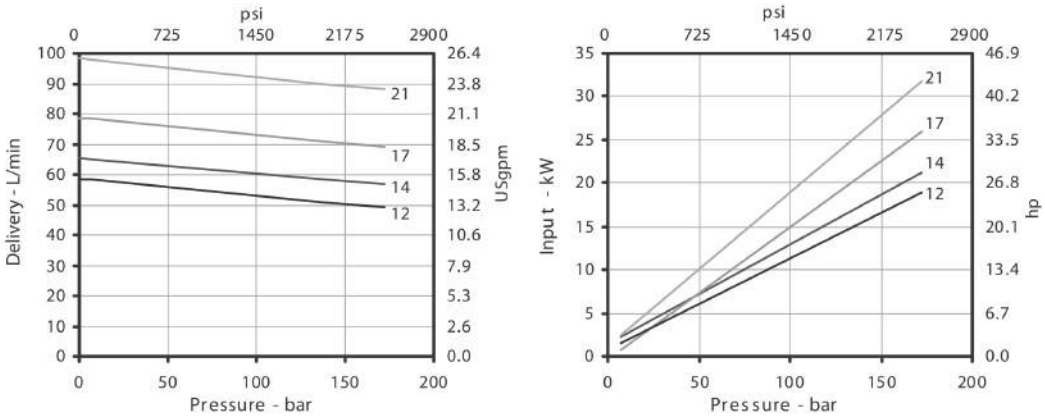

At 1800 rpm

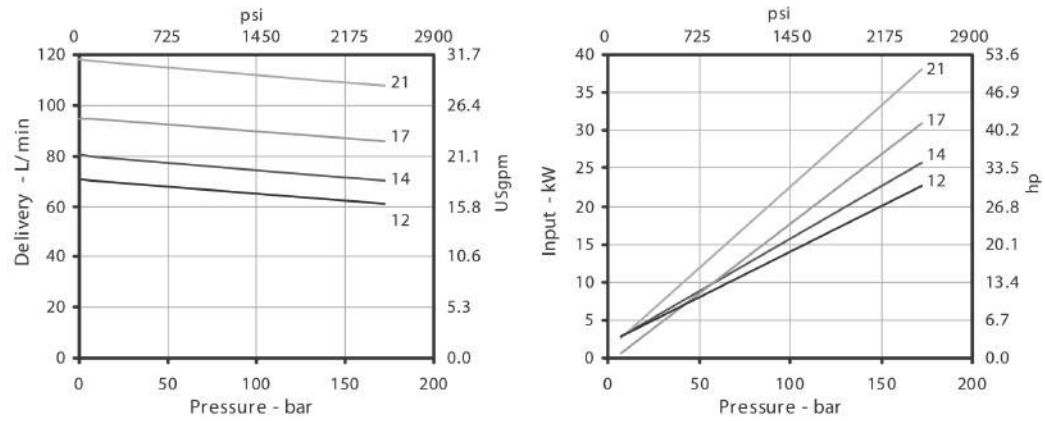

High Performance Single Vane Pump 25 HV/HVQ Series

25HVQ, Shaft End of 25HVQ, Cover End of 25HVQ

Based on SAE 10W Fluid at 50°C (120°F) and pump inlet at 0 PSIG (14.7 PSIA)

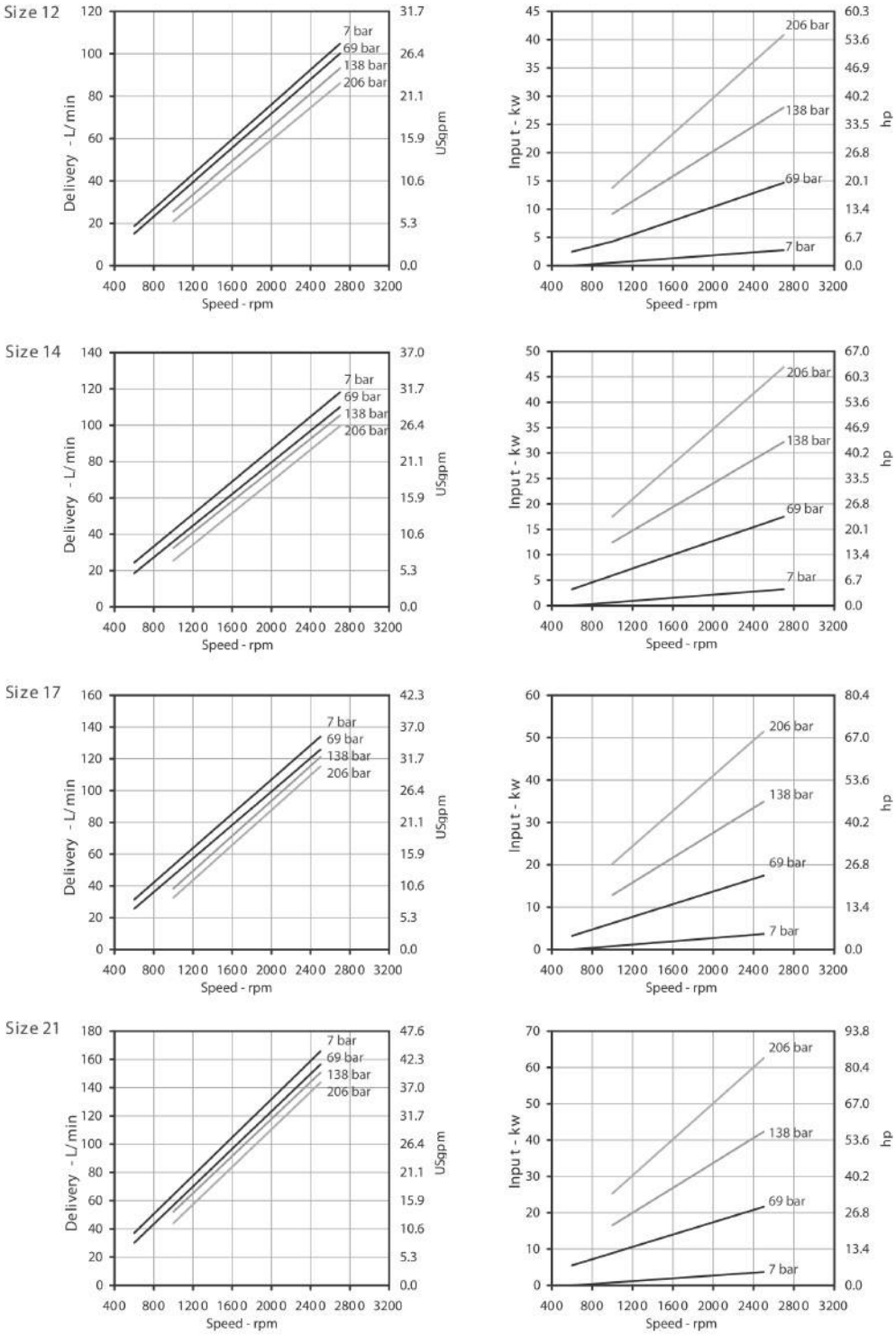

For the Cover End Cartridge, the speed could not exceed the maximum speed of the shaft End Cartridge

HOF HYDRAULIC SOLUTIONS

High Performance Single Vane Pump 35 HV/HVQ Series

Specifications :

35 HV Series

Model	Delivery at 1200 r/min & 7 bar (100 psi) USgpm	Displacement cm³/r (in³/r)	Maximum Speed rpm	Maximum Pressure bar (psi)	Typical Delivery at max speed & pressure L/min (USgpm)	Typical Input Power at max speed & pressure kW (hp)	Weight kg (lb)
35HV	21	68.3 (4.18)	1800	172 (2500)	106.3 (28.1)	34.0 (45.5)	24.0 (52.8)
	25	81 (4.94)			124.9 (33.0)	45.5 (61.0)	
	30	97 (5.91)			154.4 (40.8)	54.5 (73.0)	
	35	112 (6.83)			181.7 (48.0)	61.5 (82.4)	
	38	121 (7.37)			193.8 (51.2)	65.9 (88.3)	

35 HVQ Series

Model	Delivery at 1200 r/min & 7 bar (100 psi) USgpm	Displacement cm³/r (in³/r)	Maximum Speed rpm	Maximum Pressure bar (psi)	Typical Delivery at max speed & pressure L/min (USgpm)	Typical Input Power at max speed & pressure kW (hp)	Weight kg (lb)
35HVQ 36HVQ	21	68.3 (4.18)	2500	206 (3000)	143.8 (38.0)	55.0 (73.9)	24.0 (52.8)
	25	81 (4.98)			170.3 (45.0)	75.3 (101.0)	
	30	97 (5.96)			208.2 (55.0)	87.7 (117.5)	
	35	112 (6.88)	2400		227.1 (60.0)	98.5 (132.0)	
	38	121 (7.42)			246.0 (65.0)	104.4 (140.0)	

High Performance Single Vane Pump
35 HV/HVQ Series

Ordering Code : Single Pump

35	HVQ	-	30	A	S	-	1	C	20	L
1	2		3	4	5		6	7	8	9

1. Model :
   - 35 - Standard Bearing
   - 36 - Heavy Duty Bearing
     SAE C 2 bolts mounting flange J744

2. Series
   - HV - Industrial (Except 36)
   - HVQ - Mobile

3. Displacement
   Volumetric displacement cm³/rev (in³/rev)
   - 21 - 68.3 (4.18)
   - 25 - 81.0 (4.94)
   - 30 - 97.0 (5.91)
   - 35 - 112.0 (6.83)
   - 38 - 121.0 (7.37)

4. Port Connection (4 bolts SAE flange J518C)
   - A - UNC Port Connection
   - AM - Metric Port Connection

5. Mounting & Shaft seal assembly
   - Omit - Single Shaft Seal
   - S - Double Shaft Seal

6. Type of shaft
   - 1 - Straight Keyed Shaft
   - 11 - Splined Shaft
   - 86 - Heavy Duty Straight Keyed Shaft

7. Outlet Port Position (Viewed from cover end)
   - A - Opposite inlet
   - B - 90° CCW from inlet
   - C - Inline with inlet
   - D - 90° CW from inlet

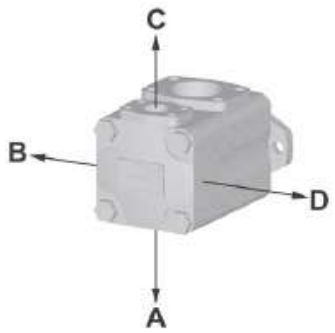

8. Design
   Subject to change. Installation dimension remain the same for designs - 20 through -29

9. Shaft Rotation (viewed from shaft end)
   - R - Turn right
   - L - Turn left

High Performance Single Vane Pump 35 HV/HVQ Series

Installation Dimension mm (inch)

Single Pump 35HV/HVQ

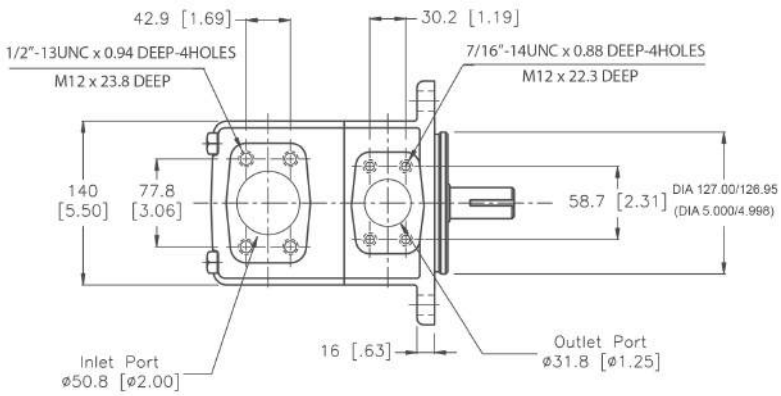

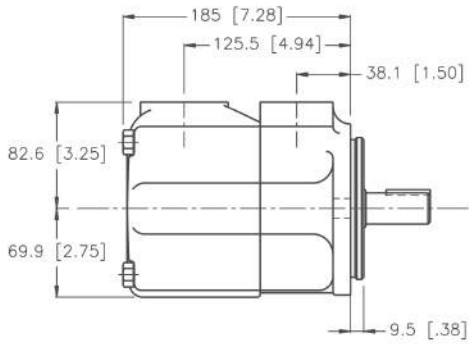

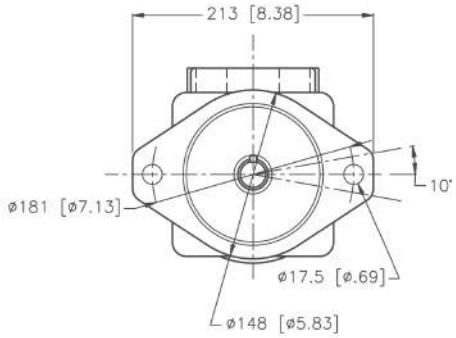

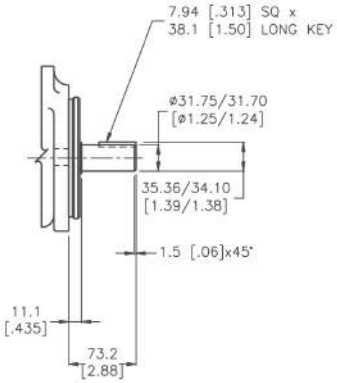

Shaft 1
Keyed Shaft

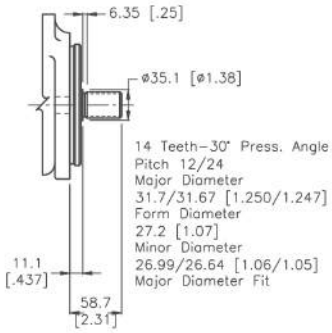

Shaft 11
Splined Shaft

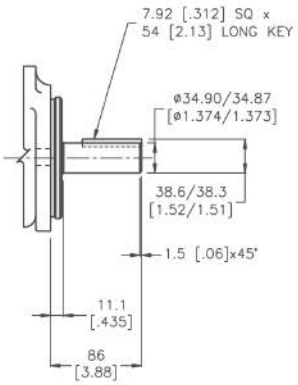

Shaft 86
Heavy Duty Keyed Shaft

High Performance Single Vane Pump 35 HV/HVQ Series

Performance Characteristics

35HV, Shaft End of 35HV, Cover End of 35HV

Based on SAE 10W Fluid at 50°C (120°F) and pump inlet at 0 PSIG (14.7 PSIA)

At 1200 rpm

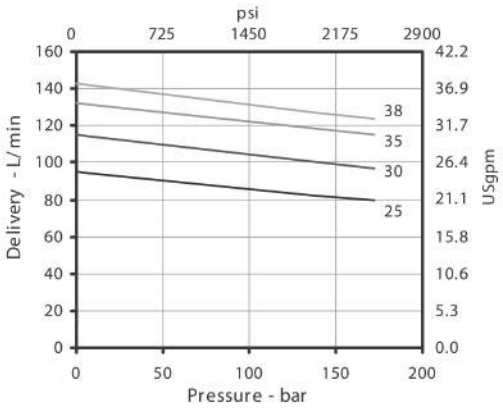

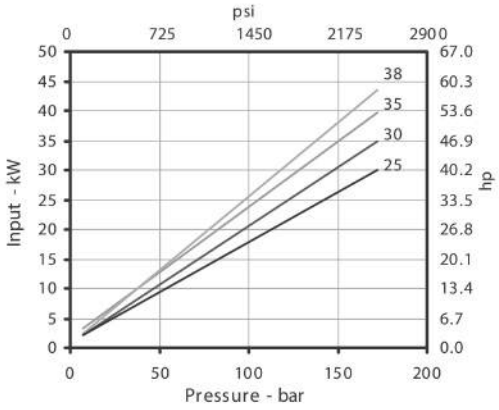

At 1500 rpm

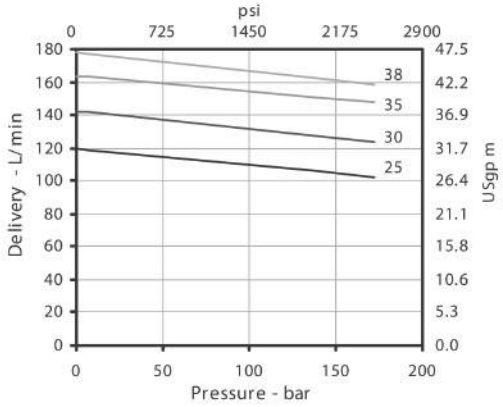

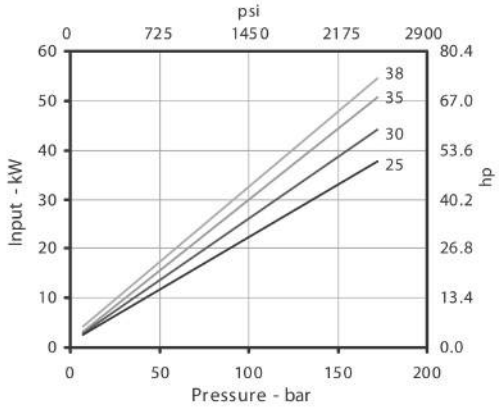

At 1800 rpm

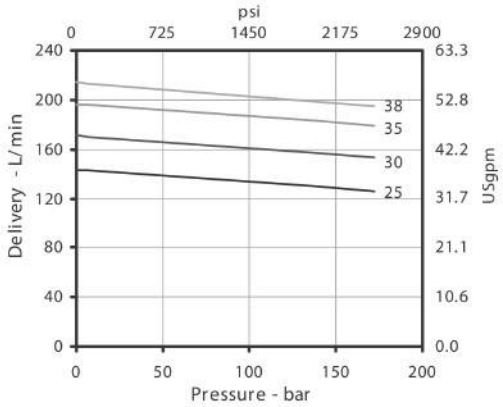

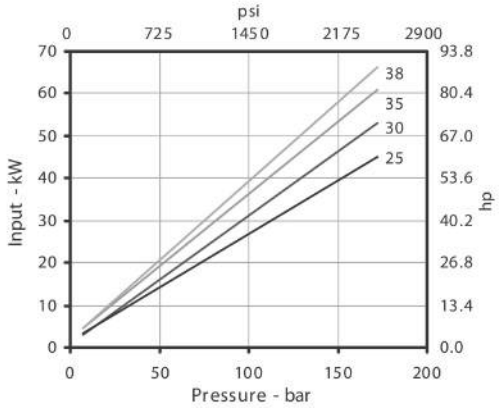

High Performance Single Vane Pump 35 HV/HVQ Series

35HVQ, Shaft End of 35HVQ, Cover End of 35HVQ

Based on SAE 10W Fluid at 82°C (180°F) and pump inlet at 0 PSIG (14.7 PSIA)

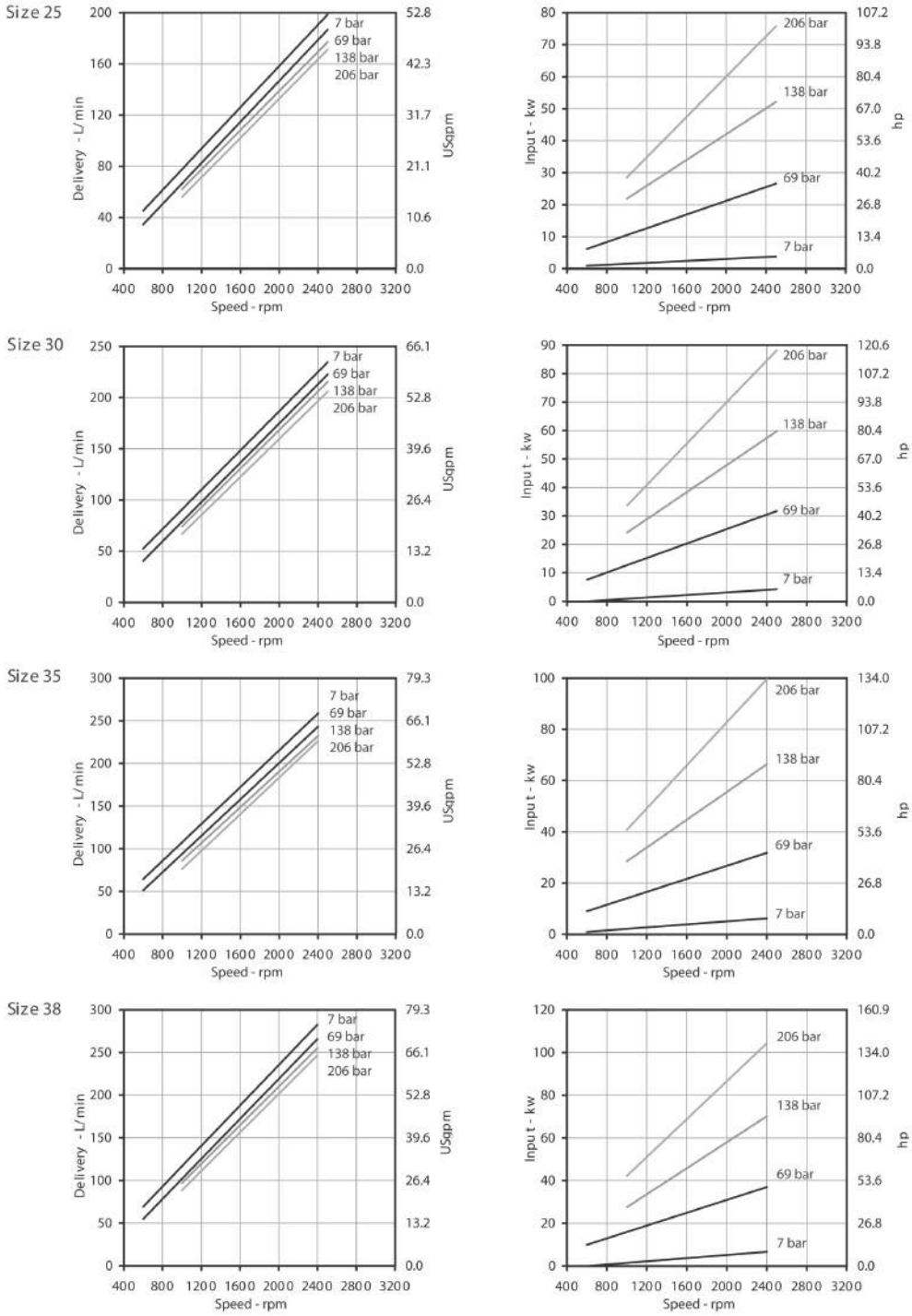

For the Cover End Cartridge, the speed could not exceed the maximum speed of the shaft End Cartridge

HOF HYDRAULIC SOLUTIONS

High Performance Single Vane Pump 45 HV/HVQ Series

Specifications :

45 HV Series

Model	Delivery at 1200 r/min & 7 bar (100 psi) USgpm	Displacement cm³/r (in³/r)	Maximum Speed rpm	Maximum Pressure bar (psi)	Typical Delivery at max speed & pressure L/min (USgpm)	Typical Input Power at max speed & pressure kW (hp)	Weight kg (lb)
45HV	42	138 (8.41)	1800	172 (2500)	208.2 (55.0)	75.3 (101.0)	35.2 (77.4)
	47	151.4 (9.26)			244.1 (64.5)	82.5 (110.6)	
	50	162 (9.85)			253.6 (67.0)	87.3 (117.0)	
	57	183.6 (11.23)			295.0 (77.8)	94.0 (126.0)	
	60	193 (11.75)			310.4 (82.0)	103.7 (139.0)	

45 HVQ Series

Model	Delivery at 1200 r/min & 7 bar (100 psi) USgpm	Displacement cm³/r (in³/r)	Maximum Speed rpm	Maximum Pressure bar (psi)	Typical Delivery at max speed & pressure L/min (USgpm)	Typical Input Power at max speed & pressure kW (hp)	Weight kg (lb)
45HVQ	42	138 (8.41)	2200	172 (2500)	251.7 (66.5)	91.4 (122.5)	35.2 (77.4)
	47	151.4 (9.26)			280.8 (74.2)	95.0 (127.3)	
	50	162 (9.90)			299.0 (79.0)	105.2 (141.0)	
	57	183.6 (11.23)			342.5 (90.5)	109.3 (146.6)	
	60	193 (11.80)			363.4 (96.0)	126.8 (170.0)	

High Performance Single Vane Pump
45 HV/HVQ Series

Ordering Code : Single Pump

45	HVQ	-	50	A	S	-	1	C	20	L
1	2		3	4	5		6	7	8	9

1. Model :
   - 45 - Standard Bearing SAE C 2 bolts mounting flange J744

2. Series
   - HV - Industrial
   - HVQ - Mobile

3. Displacement
   Volumetric displacement cm³/rev (in³/rev)
   - 42 - 138.0 (8.41)
   - 47 - 151.4 (9.26)
   - 50 - 162.0 (9.85)
   - 57 - 183.6 (11.23)
   - 60 - 193.0 (11.75)

4. Port Connection (4 bolts SAE flange J518C)
   - A - UNC Port Connection
   - AM - Metric Port Connection

5. Mounting & Shaft seal assembly
   - Omit - Single Shaft Seal
   - S - Double Shaft Seal

6. Type of shaft
   - 1 - Straight Keyed Shaft
   - 11 - Splined Shaft
   - 86 - Heavy Duty Straight Keyed Shaft

7. Outlet Port Position (Viewed from cover end)
   - A - Opposite inlet
   - B - 90° CCW from inlet
   - C - Inline with inlet
   - D - 90° CW from inlet

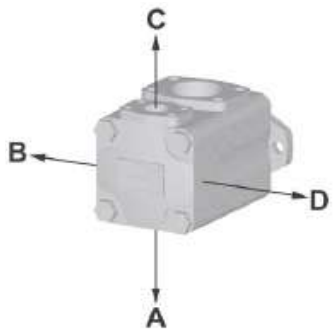

8. Design
   Subject to change. Installation dimension remain the same for designs - 20 through -29

9. Shaft Rotation (viewed from shaft end)
   - R - Turn right
   - L - Turn left

High Performance Single Vane Pump 45 HV/HVQ Series

Installation Dimension mm (inch)

Single Pump 45HV/HVQ

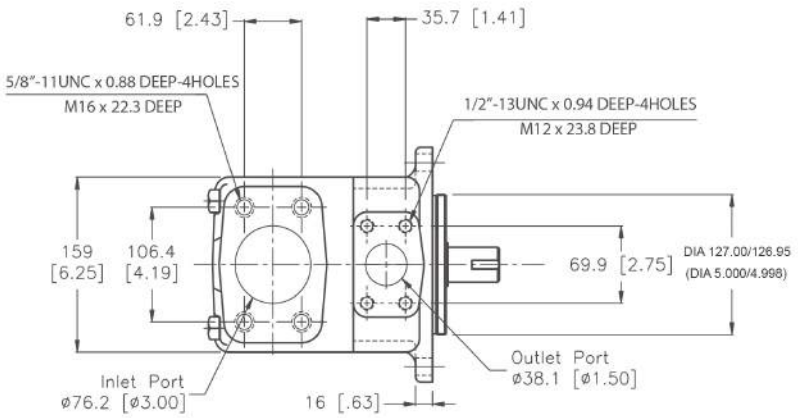

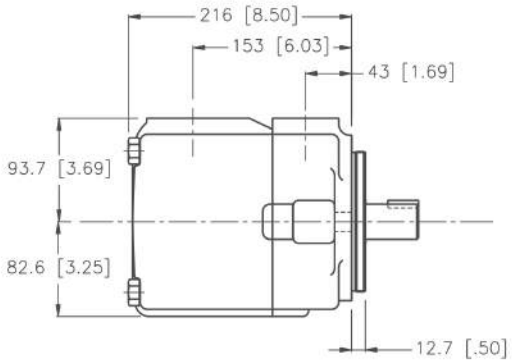

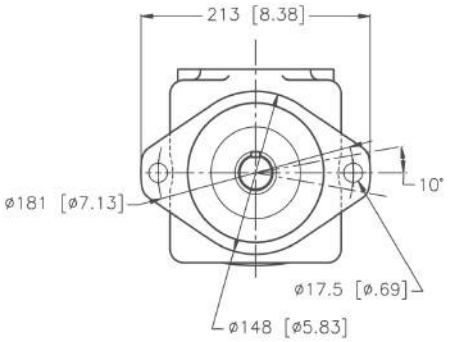

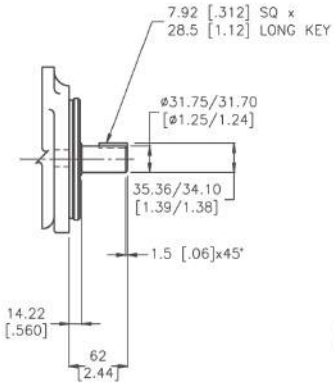

Shaft 1
Keyed Shaft

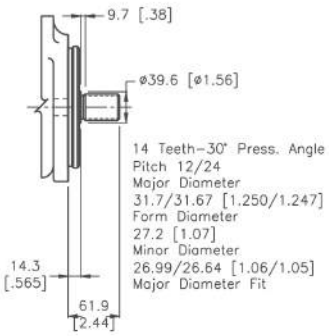

Shaft 11
Splined Shaft

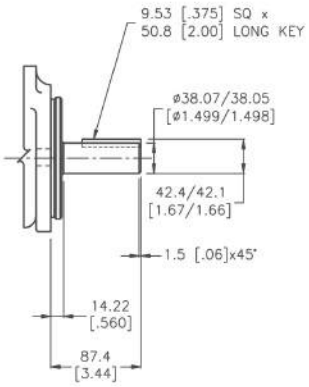

Shaft 86
Heavy Duty Keyed Shaft

High Performance Single Vane Pump 45 HV/HVQ Series

Performance Characteristics

45HV, Shaft End of 45HV

Based on SAE 10W Fluid at 50°C (120°F) and pump inlet at 0 PSIG (14.7 PSIA)

At 1200 rpm

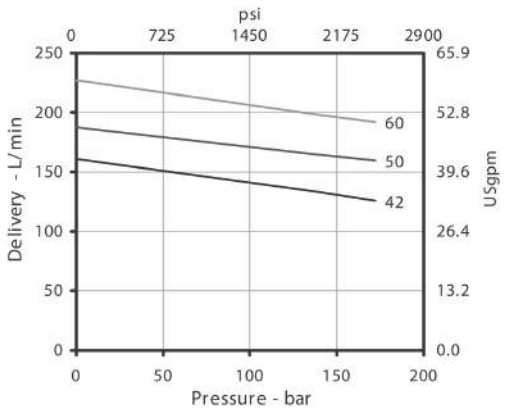

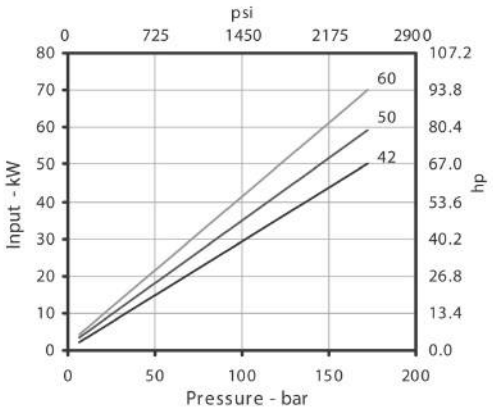

At 1500 rpm

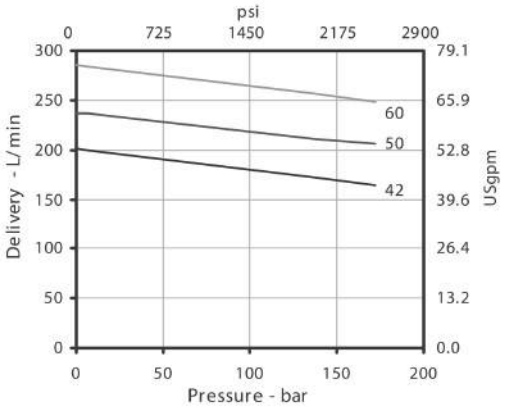

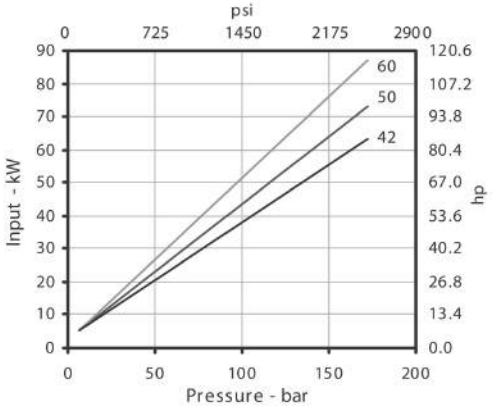

At 1800 rpm

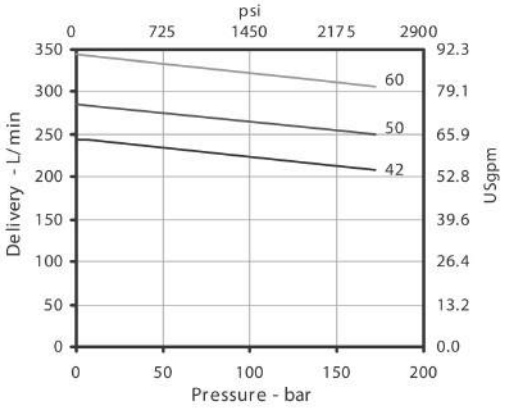

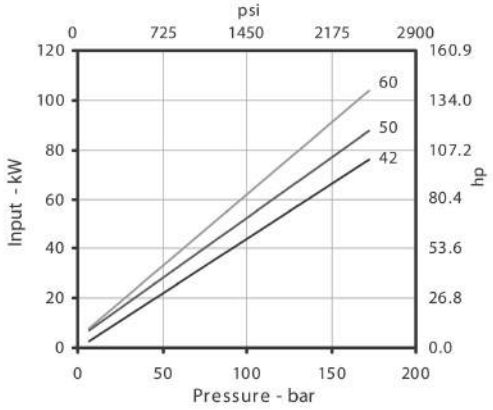

High Performance Single Vane Pump 45 HV/HVQ Series

45HVQ, Shaft End of 45HVQ

Based on SAE 10W Fluid at 50°C (120°F) and pump inlet at 0 PSIG (14.7 PSIA)

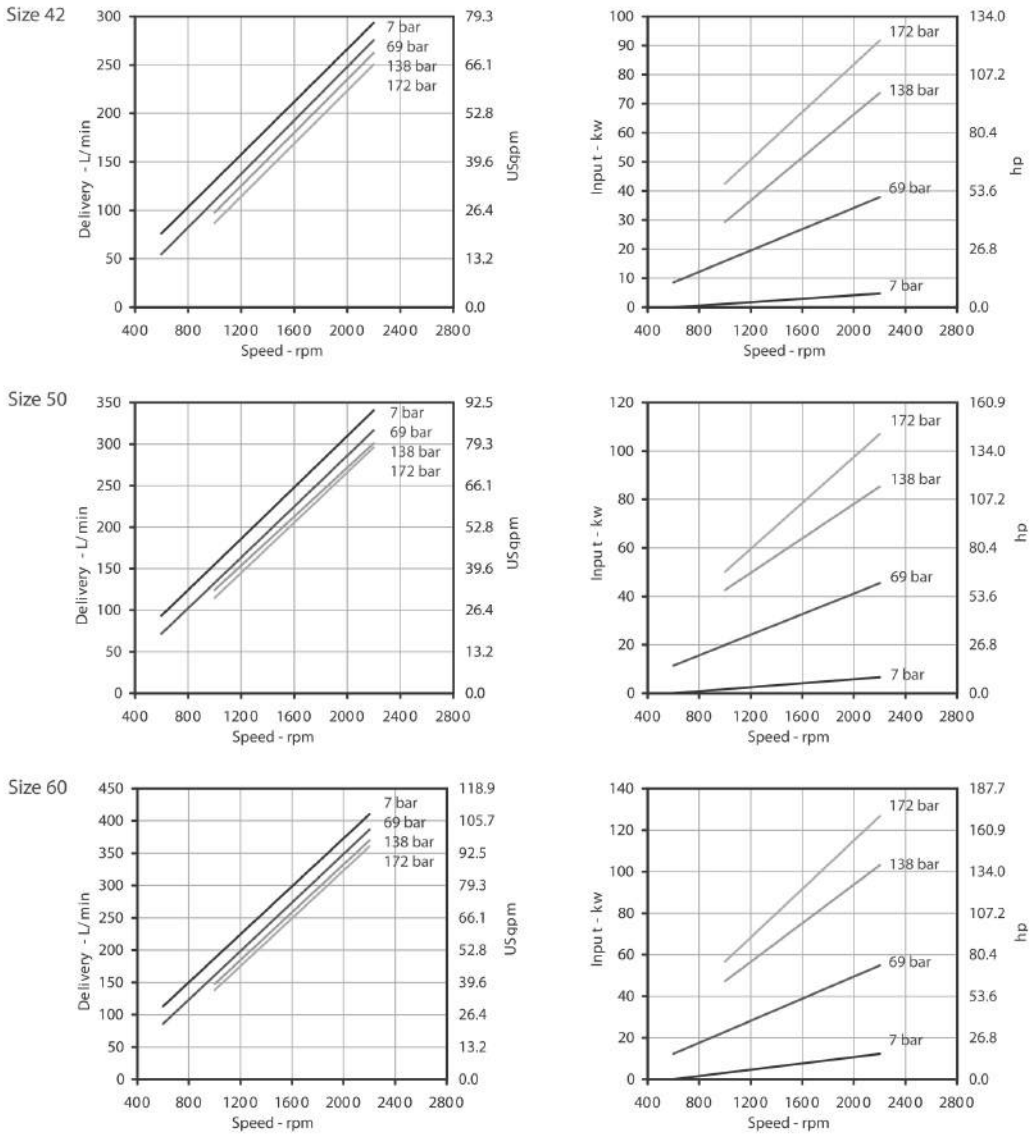

For the Cover End Cartridge, the speed could not exceed the maximum speed of the shaft End Cartridge

HOF Hydraulic represented by

Flowlution Co.,Ltd.
26/48 Moo4 Suksavadh Road, Jomthong, 10150 Bangkok, Thailand
Tel: +662 877 3223 Fax: +662 877 3373 info@flowlution.com

HOF Corindus Co.,Ltd. (Thailand only)
891 Rama3 Road, Bangpongpang, Yannawa, 10120 Bangkok
Tel: 02 284 1100 Fax: 02 683 4414 info@hofcorindus.co.th
www.hofcorindus.co.th